DAN'S

CORDLESS AIRLESS PAINT SPRAYER BACKPACK



USER MANUAL

CORDLESS AIRLESS PAINT SPRAYER
BACKPACK

- Suitable for water-based paints and standard household paints commonly sold in Australia.
- Not suitable for thick membrane coatings or heavy 2-pack coating systems.

- Please read all warnings and instructions carefully before use.
- Retain these instructions for future reference.

DO NOT

REMOVE CONTAINER WHILE IT'S FULL OF PAINT

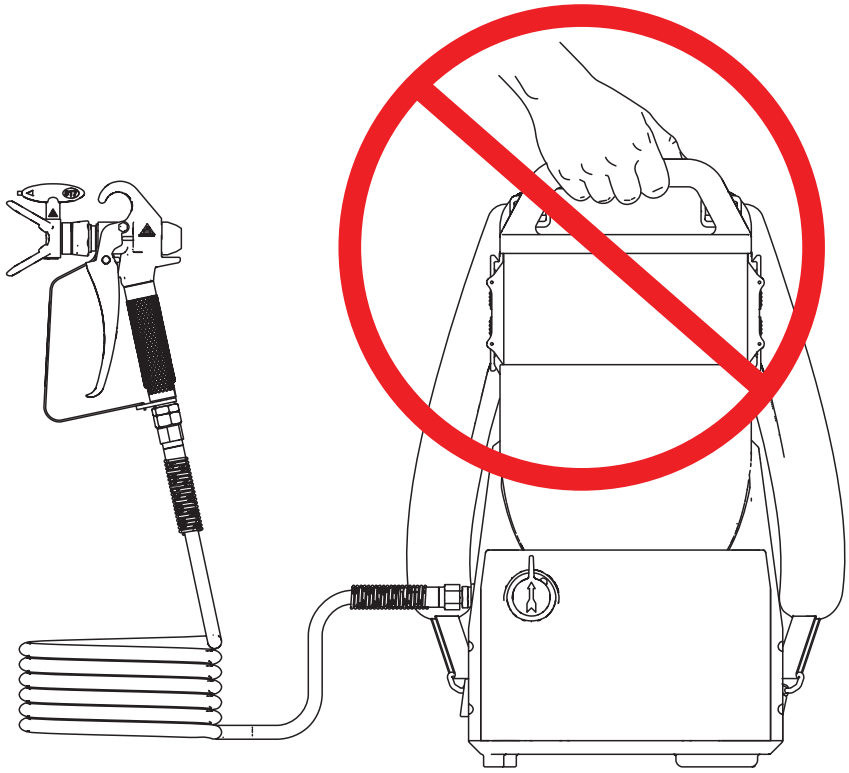

WARNING

Only water based paints may be used. Do not use materials marked as flammable on the packaging.

For more information on materials, ask your distributor or retailer for the Material Safety Data Sheet (MSDS).

Spraying certain materials may cause a buildup of static electricity in the spray gun, which can result in electric shock. If this occurs, make sure that the flash point of the material is above 38 °C (100 °F) and that it is not marked "Flammable" on the package.

If electrostatic shock is still felt, the material may contain non-mineral oil liquids, including but not limited to xylene, toluene, or naphtha, which can accumulate static charge. Switch to alternative materials.

TABLE OF CONTENTS

IMPORTANT SAFETY INFORMATION ---- **4**
GETTING STARTED ---- **6**
Grounding Wire Installation (Required for Oil-Based Paints) ---- **7**
PARTS IDENTIFICATION ---- **8**
OPERATION ---- **8**
CLEANING AND LUBRICATING BEFORE STORAGE ---- **9**
TROUBLESHOOT AND PAINT DILUTION ---- **10**
BASIC SPRAYING SKILLS ---- 10
PRESSURE RELIEF PROCEDURE ---- 11
Spraying technique ---- 12
MODES OF USE ---- 13
MOVING / EMPTYING THE SPRAYER ---- 13
COATING ---- 13
TIP JAM ---- 14
Tip Installation and Safety ---- 14
Discharge Valve Cleaning ---- 15
Battery care ---- 15
EXPLANATION OF SYMBOLS ---- **15**

WHAT'S INCUDED?





IMPORTANT SAFETY INFORMATION

SAFETY HAZARDS



WARNING: INJECTION INJURY

A high pressure paint stream produced by this equipment can pierce the skin and underlying tissues, leading to serious injury and possible amputation. See a physician immediately.

- **High-pressure spray can inject toxins into the body and cause serious bodily injury.**
  In the event of injection, seek medical attention immediately.
- **NEVER put your hand in front of the gun.**
  Gloves will not provide protection against an injection injury.
- **Do not aim the gun at, or spray any person or animal.**
- **Keep hands and other body parts away from the discharge.**
  Do not try to stop leaks with any part of the body.
- **If the tip clogs: ALWAYS lock the gun trigger, shut the pump off, and release all pressure before servicing.**
  Pressure is not relieved by turning off the motor; use the PRIME/SPRAY or pressure bleed valve as instructed.
- **Do not leave the unit energized or under pressure while unattended.**
  Turn off and relieve pressure when not in use.
- **ALWAYS keep the tip guard in place while spraying.**
- **It provides limited protection and serves as a warning device.**
- **Only use tips specified by the manufacturer.**
- **Check hoses and parts for signs of damage.**
  A leak can inject material into the skin. Inspect before each use and replace damaged hoses or parts.
  Only use manufacturer-specified parts and accessories rated for at least 1600 PSI (tips, guards, guns, extensions, fittings, hoses).
- **Know how to stop the unit and bleed pressure quickly.**
  Pressure is not released by turning off the motor. Use the PRIME/SPRAY or pressure bleed valve as instructed in the pump manual.
- **Always remove the spray tip before flushing or cleaning the system.**
- **Always engage the trigger lock when not spraying.**
  Verify the trigger lock is functioning properly.
- **Verify that all connections are secure before operating the unit.**

NOTE TO PHYSICIAN: Injection into the skin is a traumatic injury which can lead to possible amputation. It is important to treat the injury as soon as possible. DO NOT delay treatment to research toxicity. Toxicity is a concern with some coatings injected directly into the blood stream. Consultation with a plastic surgeon or reconstructive hand surgeon may be advisable.



WARNING: ELECTRIC SHOCK

This product can cause injury due to electric shock.

PREVENTION:

- Avoid body contact with earthed or grounded surfaces, such as pipes, radiators, ranges and refrigerators. There is an increased risk of electric shock if your body is earthed or grounded.
- Do not expose power tools to rain or wet conditions. Water entering a power tool will increase the risk of electric shock.



WARNING: HAZARDOUS VAPORS

Paints, solvents, insecticides, and other materials can be harmful if inhaled or come in contact with the body. Vapors can cause severe nausea, fainting, or poisoning.

PREVENTION:

- Use a respirator or mask if vapors can be inhaled. Read all instructions supplied with the mask to be sure it will provide the necessary protection.
- Wear protective eyewear.
- Wear protective clothing as required by coating manufacturer.



WARNING: GENERAL

Can cause severe injury or property damage.

- **Always wear proper personal protective equipment (PPE).**
- Use gloves, eye protection, protective clothing, and a respirator or mask when painting.

- **Keep children and bystanders away at all times.**
- Never operate or spray near children.

- **Do not operate equipment if impaired or fatigued.**
- Never use the unit when tired or under the influence of drugs or alcohol.

- **Stay alert and maintain safe body position.**
- Do not overreach. Keep stable footing and good balance while operating.

- **Inspect hoses before every use.**
- Check for cuts, leaks, abrasion, bulging, or loose couplings. Replace damaged hoses immediately. Never repair a paint hose.

- **Prevent hose damage and misuse.**
- Do not kink, over-bend, pull, or lift equipment by the hose. Do not exceed manufacturer pressure or temperature limits.

- **Use the lowest possible pressure for flushing and cleaning.**

- **Follow all local, state, and national safety codes.**
- This includes ventilation, fire prevention, and operational requirements.

- **Do not spray outdoors on windy days.**



WARNING: EXPLOSION OR FIRE

Solvent and paint fumes can explode or ignite. Severe injury and/or property damage can occur.

- **Fire and explosion can occur from flammable vapors.**
  Never spray flammable or combustible materials near flames, pilot lights, cigarettes, hot objects, motors, or electrical equipment. Avoid creating sparks when plugging or unplugging power cords.
- **Only use approved, non-flammable materials.**
  Do not spray or clean with liquids that have a flash point below 38°C (100°F).
- **Static electricity can cause sparks and explosions.**
  Ground all parts of the system (pump, hose, gun, containers, and spray area). Use only manufacturer-approved, grounded high-pressure hoses.
- **Never use incompatible chemicals.**
  Do not use paints or solvents containing halogenated hydrocarbons (e.g., bleach, chlorine, methylene chloride, trichloroethane). These are unsafe with aluminum components.
- **Keep the spray area extremely well ventilated.**
  Ensure constant fresh airflow to prevent buildup of flammable vapors. Do not spray the pump assembly.
- **Keep ignition sources out of the spray area.**
  Do not smoke, flip light switches, run engines, or use spark-producing equipment while spraying.
- **Position the pump safely.**
  Place the pump at least 20 feet (6 meters) from the spray area in a well-ventilated location. Vapors can travel along the floor and ignite.
- **Keep the area clean and organized.**
  Remove paint containers, solvent cans, rags, and other flammable materials from the spray area.
- **Know the materials you are using.**
  Read all Safety Data Sheets (SDS) and container labels. Follow the paint and solvent manufacturer's instructions.
- **Avoid plastic materials in flammable spray areas.**
  Plastic can cause static sparks. Do not enclose spray areas with plastic or use plastic drop cloths when spraying flammable materials.
- **Always have fire safety equipment ready.**
  Ensure a fire extinguisher is present and in working condition.

! WARNING

FIRE & EXPLOSION HAZARD

- Use accessories rated 1600 PSI / 110 bar or higher
- Do not spray flammable materials
- Use water-based paints only
- Operate in well-ventilated areas
- Read all instructions before use

! ATTENTION

SKIN INJECTION HAZARD

- High-pressure spray can penetrate skin
- Never point the spray gun at people
- Seek immediate medical attention if an injury occurs
- Relieve pressure before servicing or storage
- Remove the battery before maintenance

i IMPORTANT

Do not run the sprayer dry.
Always ensure liquid is in the tank.

GETTING STARTED

To begin using the sprayer, follow these steps:

1 Unpack and check all parts
Unpack everything carefully and make sure all components are included and undamaged.

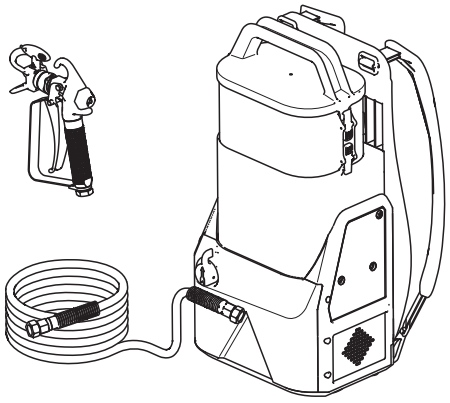

2 Connect the hose and gun (high pressure)
Attach the high-pressure hose to the sprayer and to the spray gun. Use the provided wrenches to tighten all connections.
Important: Connections must be tight because the system operates under high pressure.

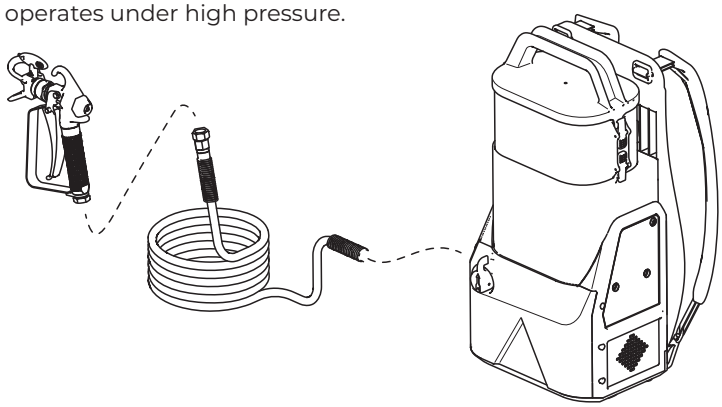

3 Install the reservoir filter
Open the reservoir lid and install the filter provided.

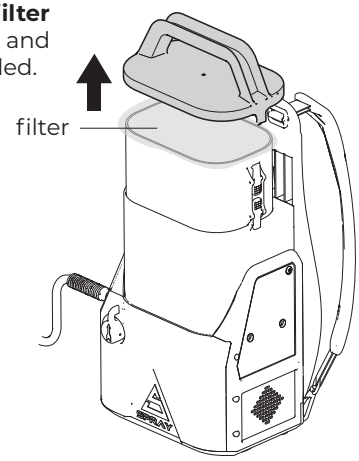

4 Fill with paint
Pour paint into the reservoir. If you are using a strainer, strain the paint as you pour (recommended).



5 Install the tip and tip guard
Insert the correct dedicated spray tip into the tip guard, then attach it to the gun. Make sure everything is seated properly and secure.

a. Install the tip and tip guard.

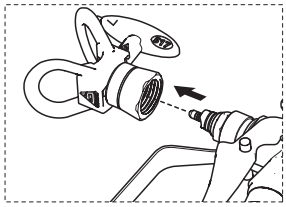

b. Insert the correct dedicated spray tip into the tip guard, then attach it to the gun.

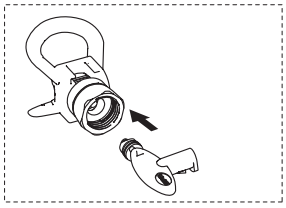

Make sure the tip saddle is installed correctly.

c. Make sure everything is seated properly and secure.

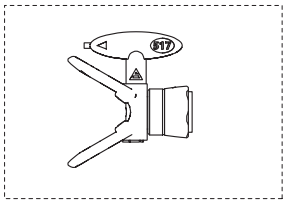

6 Prime the sprayer:
Set the unit to priming mode and prime for about 30 seconds (or until flow is steady).

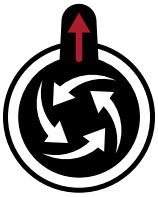

PRIMING POSITION
PRIME BEFORE SPRAYING

30 seconds

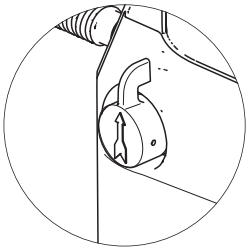

7 Set pump speed / pressure
Start low, then slowly increase using the Pump Speed Controller until you get a consistent spray. The ideal setting depends on paint thickness and temperature—use only as much pressure as needed for a clean fan.

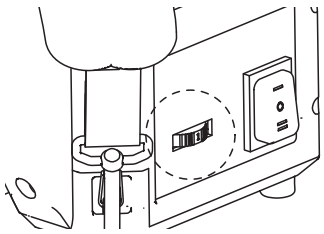

6 Speed Control

1 2 3 4 5 6

Low ⟷ High

8 **Switch to spray mode**
Once primed and ready, switch the selector into spray mode.



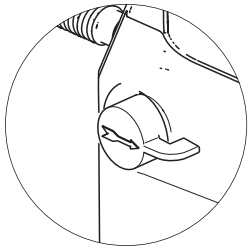

9 **Put on the backpack (optional)**
You can carry the unit using the backpack harness, or place it on the ground—whichever is more comfortable and stable for the job.

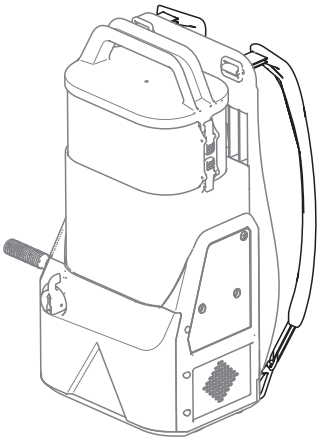

10 **Test spray before starting the job**
Before spraying the surface, always test on a piece of cardboard or a small hidden area:

- Check the fan is even.
  Make sure there are *no tails**
- Confirm the paint output feels correct
  If needed, adjust pressure slightly or confirm the tip is the right one for the paint.

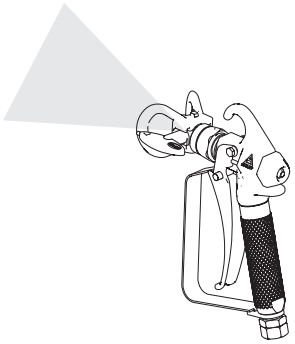

11 **Start painting:**
Once the pattern is clean and consistent, you're ready to spray your project.

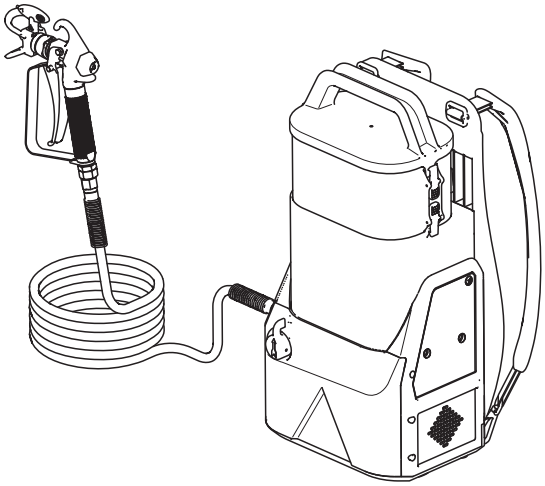



Grounding Wire Installation (Required for Oil-Based Paints)

When spraying oil-based coatings, the grounding wire must be installed before operating the sprayer to help reduce the risk of static electricity buildup.

1. Attach one end of the grounding wire to the hose connection on the sprayer as shown in **Figure 1.**
2. Connect the other end of the 5-metre grounding cable to a suitable grounded electrical outlet as shown in **Figure 2.**

Important:
The grounding wire is required when spraying oil-based paints. The sprayer is not recommended for two-pack (2K) coatings.

Figure 1
Grounding wire connected to the sprayer hose fitting.

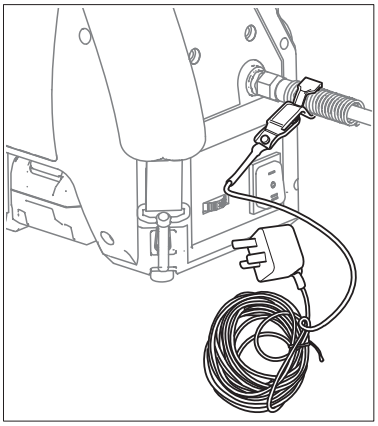

Figure 2
Grounding wire connected to a grounded electrical outlet.

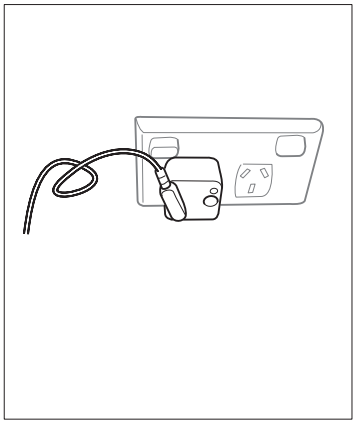

PARTS IDENTIFICATION

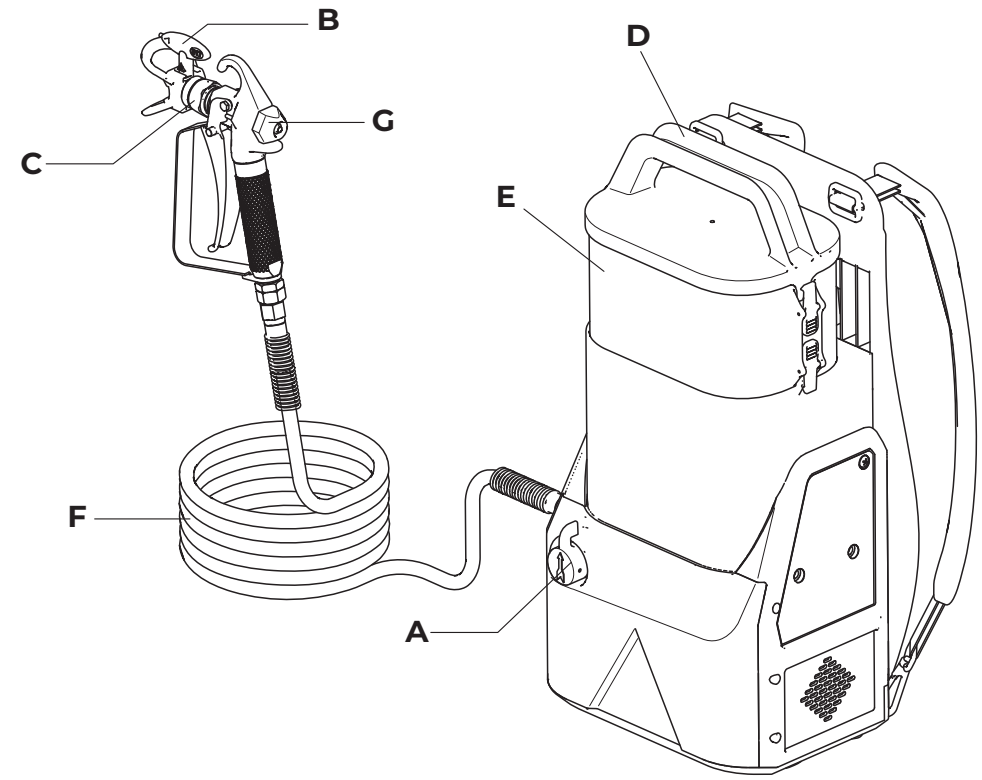

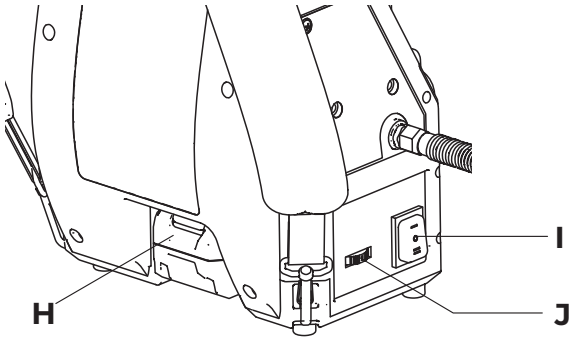

* A – Priming Valve
* B – Tip
* C – Tip Guard
* D – Reservoir Lid
* E – Reservoir
* F – High-Pressure Hose
* G – Needle Cap
* H – Battery Pack
* I – Power Switch
* J – Pump Speed Controller

OPERATION

- High-pressure spray can cause serious injury.
- The spray gun operates at up to 2000 PSI. Never point the gun at people or animals, and never place hands or body in front of the tip.
- Always release pressure before handling the spray gun.
- Follow proper pressure-release procedures before stopping, cleaning, inspecting, repairing, or servicing the gun.
- Only use approved, non-flammable materials.
- Do not use materials labeled Flammable or with flash points below 100°F (38°C). Use only approved oil-based, water-based, or non-flammable thinners.
- Fire and vapor hazards require constant ventilation.
- Use outdoors or in well-ventilated areas with fresh airflow. Keep the spray area well ventilated at all times.
- Keep children and bystanders away.
- Know the materials you are using.
- Read the Safety Data Sheet (SDS) for all paints, coatings, and thinners.
- Do not use incompatible cleaning agents.
- Do not use detergents such as chlorine bleach.

Always start with a fully charged battery.
See battery and charger safety information.

CLEANING AND LUBRICATING BEFORE STORAGE

Use only oily (non-flammable) or water-based materials, or non-flammable paint thinner. Do not use materials with flash points below 100°F (38°C). Do not use materials marked “Flammable” on the package. For more information about your material, request the Safety Data Sheet (SDS) from your distributor or retailer.

When spraying oil-based materials, use the sprayer outdoors or in well-ventilated indoor areas with a continuous flow of fresh air. Keep the spraying area well ventilated at all times.

During cleaning, keep the gun body at least 25 cm away from the cleaning container to prevent cleaning fluid from entering the electronic components of the machine.

To prepare the sprayer for storage, follow these steps:

1 **Empty the reservoir completely.**

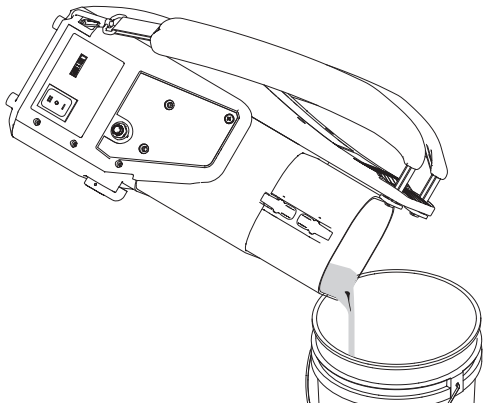

2 **Flush the system with clean water:**
Add water, prime the sprayer, and spray it out until the water coming from the gun runs clear.
(Use approximately 3–5 litres of water.)

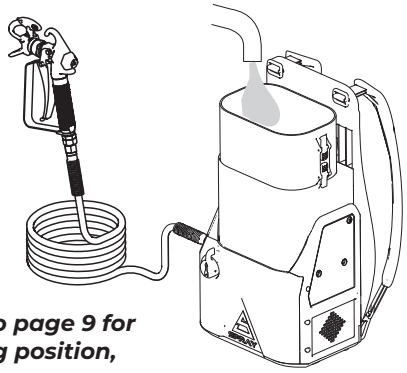

Refer to page 9 for Priming position,

3 **Add pump storage fluid:**
Pour 40 ml of Pump Storage Fluid into the system and run the sprayer in priming mode for about 5 seconds.

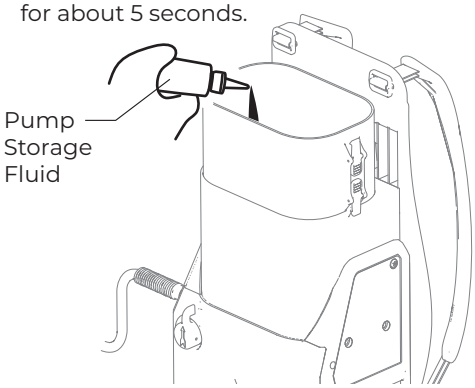

4 **Lubricate the inlet valve:**
Add one drop of oil into the inlet valve and run the sprayer in priming mode for an additional 2–3 seconds.

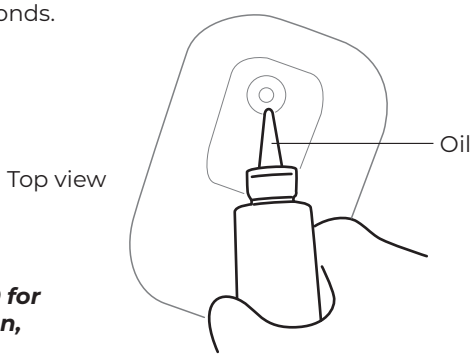

Refer to page 9 for Priming position,

5 **Clean the gun filter:**
Unscrew the gun handle, remove the filter, and clean it thoroughly.

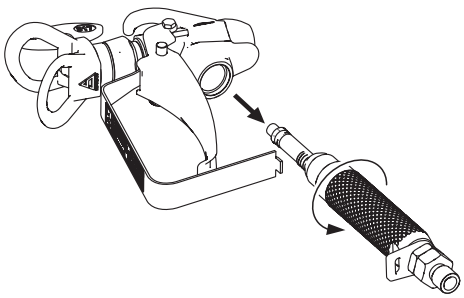

6 **Reassemble the sprayer:**
Put all components back together. The unit is now ready for storage.

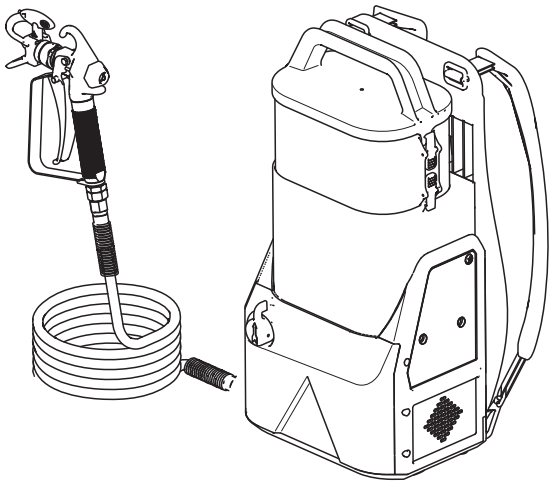

TROUBLESHOOT AND PAINT DILUTION

If the sprayer does not spray properly, the paint may be too thick or the sprayer may not be set up correctly.

1 **Check the paint**
Use household paint suitable for spraying.
If the paint is too thick, dilute it by up to 10%, mix well, and filter before use.

2 **Check the inlet valve**
Remove the filter.
Use a small screwdriver to gently press the inlet valve ball and make sure it moves freely.
Reinstall the filter.

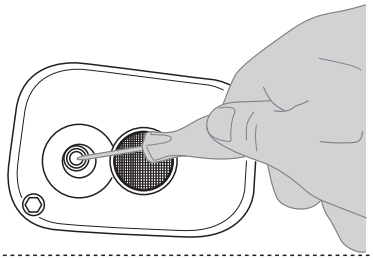

3 **Tighten all connections**
Make sure all parts are assembled correctly.
Use wrenches if needed and check that there are no leaks.

4 **Prime the sprayer.**
Fill the cup with paint.
Open the exhaust valve to release air, then close it.
Repeat if needed until paint flows properly.

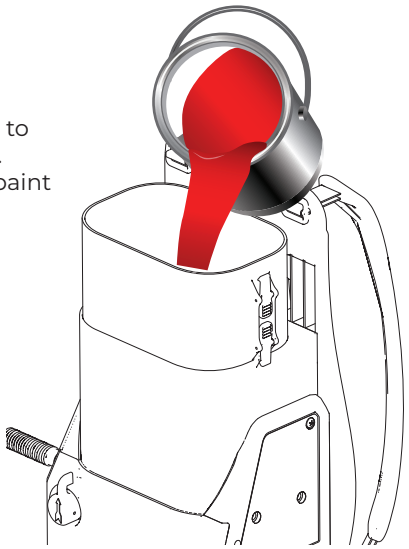

5 **Install the battery**
Install the battery securely onto the sprayer.

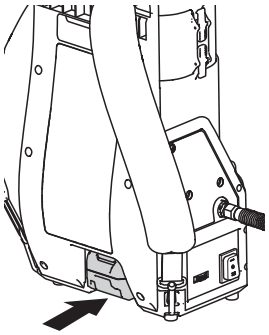

Refer to page 9 for Priming position,

6 **Set the spray tip and spray**
The spray tip has three positions: SPRAY, CLEAN, and CLOSED.
Make sure the tip is set to the SPRAY position and not perpendicular to the tip guard.
If the tip is in the CLOSED position, the sprayer will not spray.

Set the spray pattern and start spraying.

Spray ***Clean*** ***Closed***

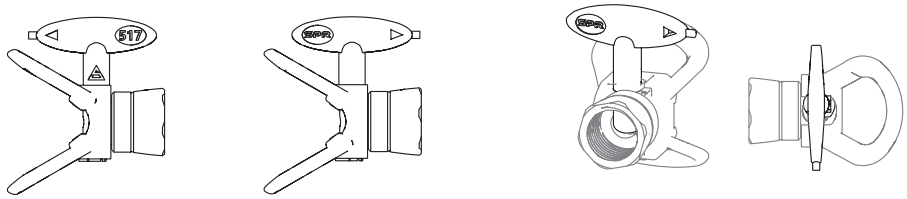

BASIC SPRAYING SKILLS

- Spend time practicing before spraying, and read the spray instructions carefully to ensure optimal spray quality.
- During spraying, maintain a consistent distance between the tip and the workpiece, use uniform spraying materials, and keep a steady spraying speed to achieve proper spray pattern results.

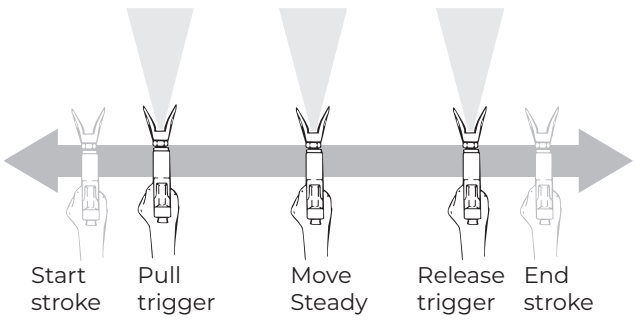

PRESSURE RELIEF PROCEDURE

WARNING – HIGH PRESSURE

This spray gun operates at pressures up to 2000 PSI (14 MPa / 138 bar).
To prevent serious injury, always follow the pressure-release procedure before stopping spraying, and before cleaning, inspecting, repairing, or transporting the machine.

1 **Turn off the power.**

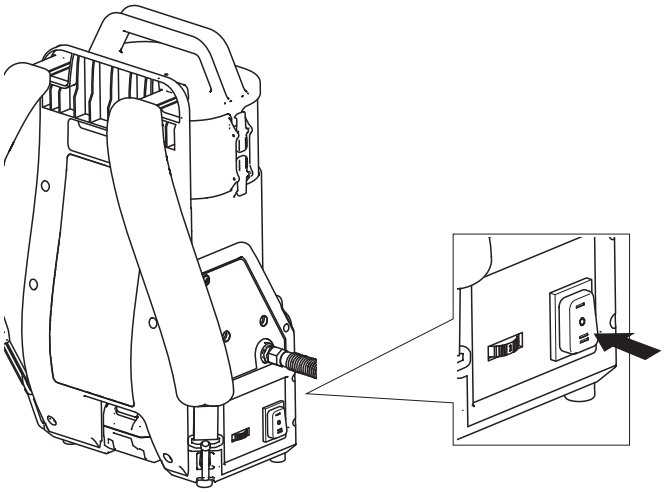

2 **Disconnect the battery from the machine.**

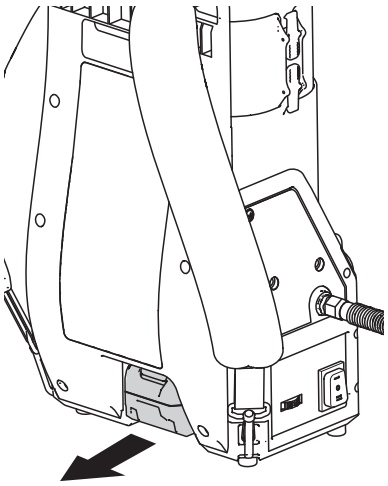

3 **Turn the pressure relief switch up to release the pressure.**

When spraying stops, lock the trigger to prevent accidental activation, dropping, or collision. Turn the power switch off.

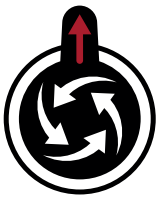

PRIMING POSITION
PRIME BEFORE SPRAYING

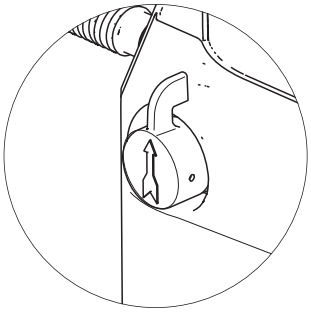

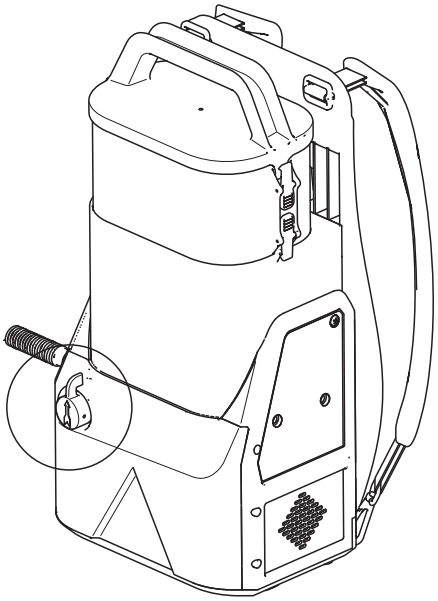

SPRAY POSITION
NORMAL OPERATION

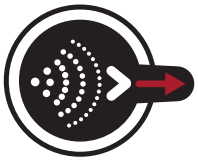

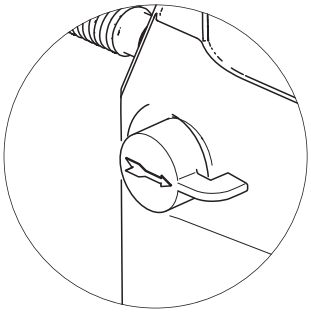

Spraying Technique:

Practice on a piece of waste cardboard until you become familiar with the spraying operation. Begin spraying the workpiece only after proper control is achieved. Areas that do not require spraying should be properly covered or masked.

Hold the spray gun at least 25 cm (10 inches) from the spray surface and adjust the distance as necessary to achieve the desired effect. Keep the spray gun perpendicular to the surface. If the spray gun is tilted or held at an angle to the surface, the coating will be uneven.

While spraying, the spray guard / tip assembly can be rotated to better suit your spraying motion.

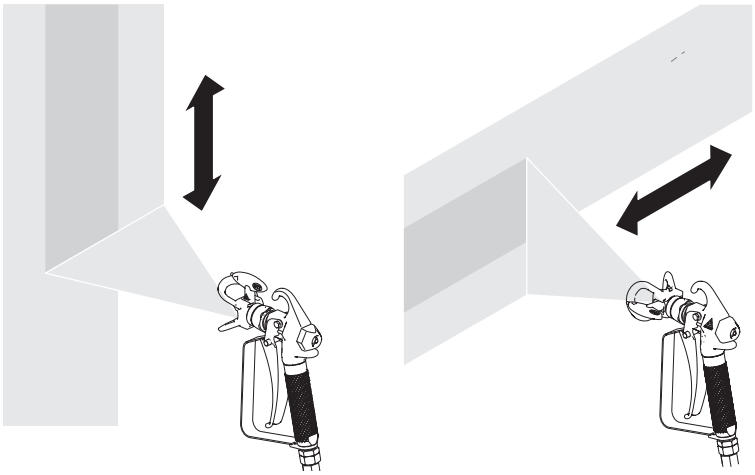

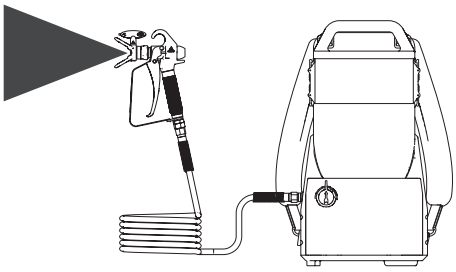

Evenly spray the surface.

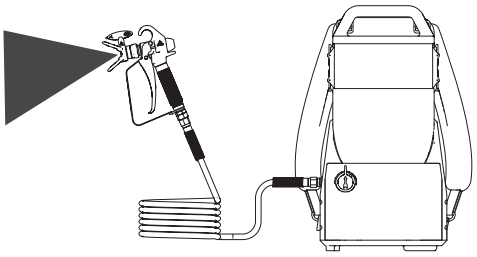

Uneven Surface Spraying

Rotate your wrist so that the spray gun moves in a smooth, straight-line motion. Keep the spray gun perpendicular to the surface throughout the spray stroke to ensure even coverage.

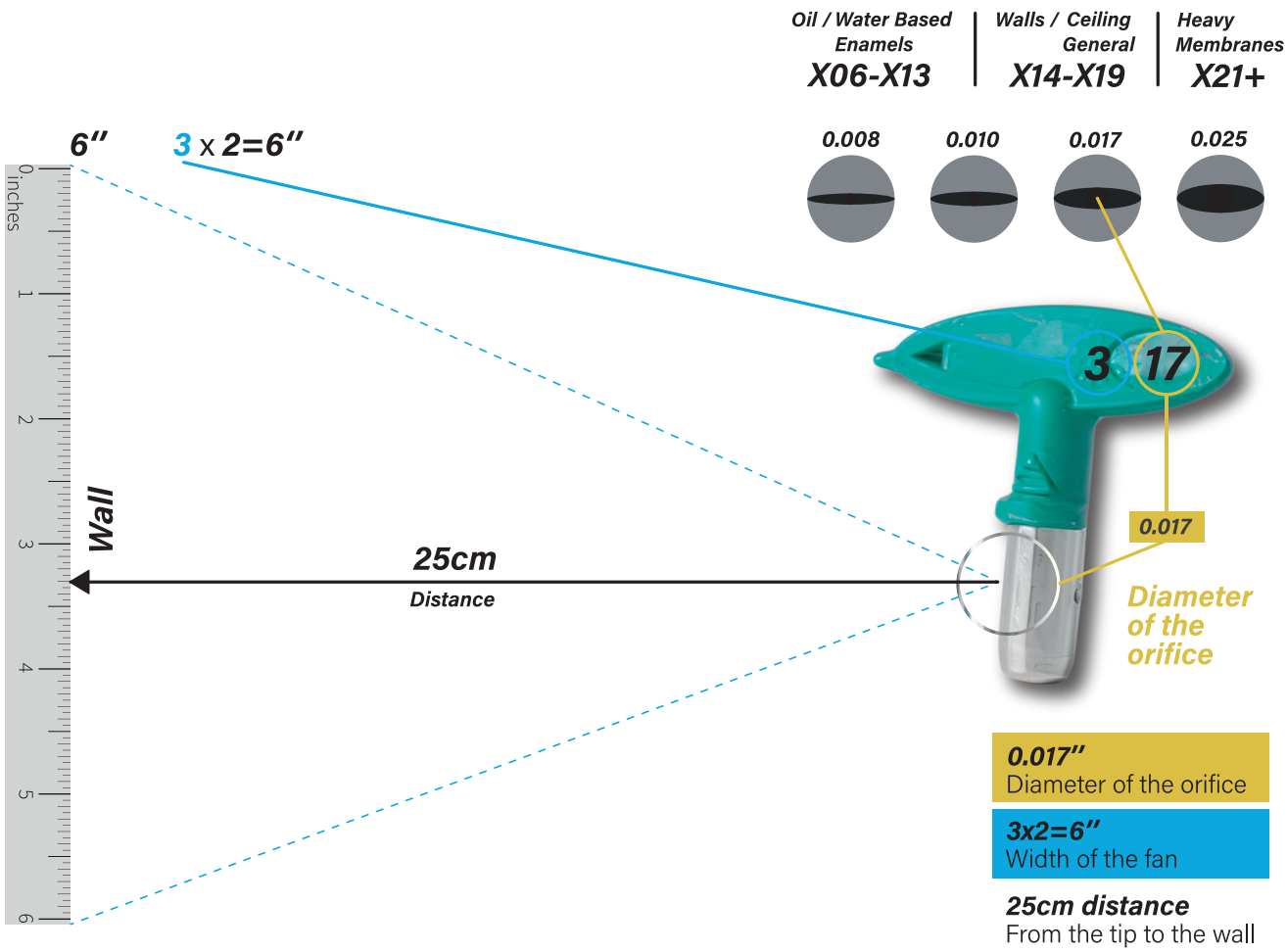

MODES OF USE

This sprayer can either be used as a regular stationary pump* or can be used in backpack mode.

In order to use in stationary mode, it is recommended that a longer hose be purchased separately.

STATIONARY

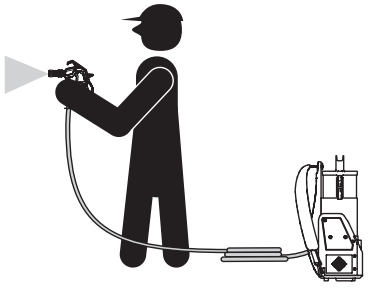

BACKPACK

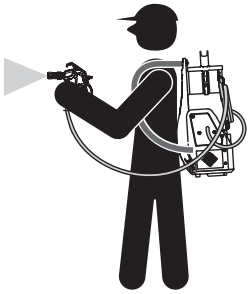

CARRY

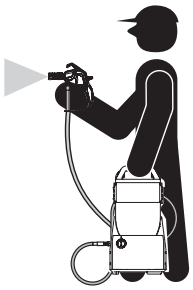

MOVING / EMPTYING THE SPRAYER

When lifting the sprayer in order to move it or to empty the tank, secure with both hands in the grooved handle area in the battery garage and on the top handle.

The sprayer can be heavy when filled with spraying material. Make sure to lift with your legs and not your back in order to reduce the risk of injury.

Attention

Do not use the hose as a strength member to pull or lift the equipment.
This pump is liquid-cooled. Do not allow the sprayer to run without paint or water in the tank.

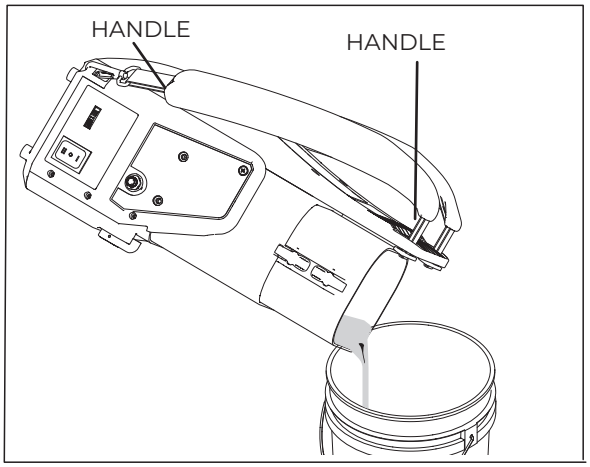

COATING

	Coatings					
	Thin colorant or cleanser	Thick colorant or cleanser	Primer	Porcelain paint	Interior paint	Exterior paint
Speed control	I	II	II	II	II	II
Tip hole size						
208in. (0 . 20mm)	√					
310in. (0 . 25mm)	√	√				
412in. (0 . 30mm)		√		√		
514in. (0 . 36mm)		√	√	√	√	
616in. (0 . 41mm)		√	√	√	√	√

TIP JAM

1. Open the pressure relief valve before emptying the tip.

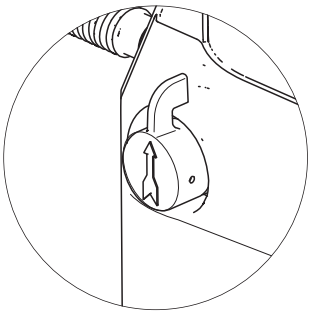

2. Rotate the tip to the dredge position.

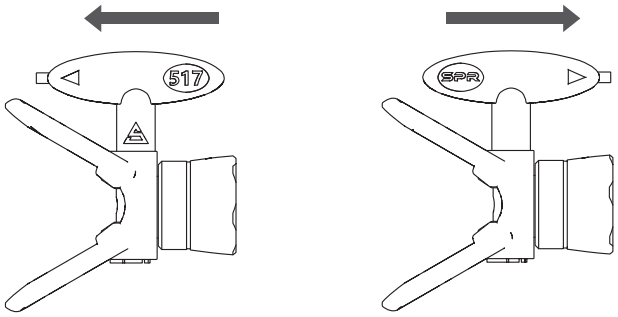

3. Change to higher gear.

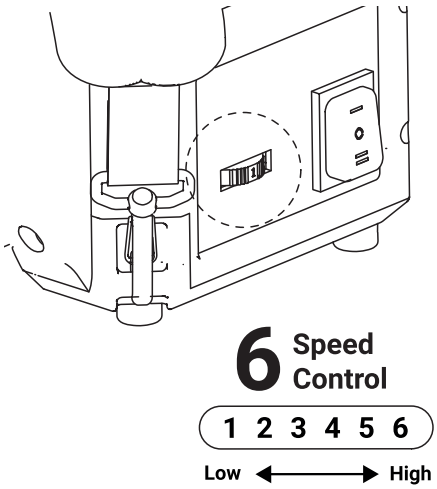

4. Aim the spray gun toward the waste area. Turn the pressure relief switch to the spray position and pull the trigger to clear the blockage.

5. Set pressure relief switch to relief position, rotate tip to spray position, then resume spraying.

6. If the tip remains clogged, repeat steps 1 through 5, or replace the tip assembly with a new one.

TIP Installation and Safety

Warning:

Do not place your hand in front of the tip when installing or removing the tip or tip seat. Always install the tip correctly to prevent leakage.

1. Open the pressure relief valve.
2. Install the gasket onto the tip.

Thread the tip and tip seat assembly onto the spray gun and tighten by hand.

Note:

Tips wear during use and must be replaced when spray patterns or performance deteriorate.
Clean the tip immediately after use. If paint dries inside the tip, it may become clogged and unusable.

Discharge Valve Cleaning

Dirt or debris in the discharge valve assembly may affect spray gun performance and must be cleaned regularly.

Cleaning Procedure

1. Remove the discharge valve assembly.
2. Clean the discharge valve assembly using warm water or a suitable cleaning solution.
3. Ensure the return ball moves freely and the alloy plate fits tightly.
4. If the discharge valve assembly was removed, reassemble it into the sleeve as shown.

Attention

- Tighten the tip seat securely to prevent liquid leakage and ensure proper atomization.
- Do not drop or lose the O-ring on the valve sleeve.
- Before installing into the pump inlet, ensure the one-way valve remains in place.
- If liquid inside the pump freezes, the pump may be damaged.
- At low temperatures, impact may damage plastic components.
- At very low or very high temperatures, paint viscosity changes, which can affect spray gun performance.
- Noise level is measured at a distance of 1 m (3.1 ft) from the equipment in accordance with ISO 9001.
- Measurements are taken under no-load conditions in accordance with ISO 9001 requirements.

BATTERY CARE

- Improper battery handling can cause fire, burns, or explosion.
- Keep the battery away from fire, heat, water, and rain.
- Do not place it in a microwave or high-pressure container.
- Never disassemble, crush, puncture, or mix battery terminals.
- Do not connect positive and negative electrodes together.
- Use only the manufacturer-approved (PD-approved) charger.
- If battery chemicals contact skin or eyes, act immediately.
- Wash skin with soap and water
- Rinse eyes with clean water for at least 15 minutes and seek medical attention
- Do not expose the battery to hazardous conditions.
- Avoid impact, misuse, or improper storage that could cause damage or leakage.
- Dispose of batteries according to local regulations.



Do not attempt to disassemble the battery or remove any component projecting from the battery terminals. Fire or injury may result. Prior to disposal, protect exposed terminals with heavy insulating tape to prevent shorting.

EXPLANATION OF SYMBOLS



→ This symbol indicates a potential hazard that may cause serious injury or loss of life. Important safety information will follow.



Attention

→ This symbol indicates a potential hazard to you or to the equipment. Important information that tells how to prevent damage to the equipment or how to avoid causes of minor injuries will follow.



→ Danger of skin injection



→ Danger of fire from solvent and paint fumes



→ Danger of explosion from solvent, paint fumes and incompatible materials



→ Danger of injury from inhalation of harmful vapor



→ Electric shock hazard



→ Notes give important information which should be given special attention.

DAN'S

? NEED HELP?

Scan the QR code for support and troubleshooting.